NDS STORMCHAMBERS

PROJECT NAME
PROJECT LOCATION

NDS STORMCHAMBER SYSTEM SPECIFICATIONS

1. CHAMBERS SHALL BE NDS STORMCHAMBER .
2. CHAMBERS SHALL BE ARCH SHAPED AND SHALL BE MANUFACTURED FROM HIGH MOLECULAR WEIGHT HIGH DENSITY POLYETHYLENE.
3. CHAMBERS MEET OR EXCEED ASTM F2922 AND ASTM F2787. MEET AASHTO HS-20, HS-25 AND HL-93 LIVE LOADING PER AASHTO LRFD SECTION 12.
4. MANUFACTURED NOMINAL DIMENSIONS OF START, MIDDLE AND END CHAMBERS
   - SC18 3.17 FT WIDE X 18 INCHES TALL.
   - SC34 5 FT WIDE X 34 INCHES TALL.
   - SC44 6.35 FT WIDE X 44 INCHES TALL.
5. MINIMUM COVER FOR SC18 AND SC34 IS 18 INCHES, MINIMUM COVER FOR SC44 IS 22 INCHES .
6. SEDIMENTRAP MANUFACTURED WITH HIGH MOLECULAR WEIGHT, HIGH DENSITY POLYETHYLENE.
7. NON-WOVEN POLYPROPYLENE FILTER FABRIC TMG-4OZNWG BY TMPG OR APPROVED EQUAL
8. WOVEN POLYPROPYLENE FILTER FABRIC 300HTM BY WINFAB OR APPROVED EQUAL.
9. THE PERFORMANCE OF NDS STORMCHAMBER¨ IS DIRECTLY CORRELATED TO THE LOAD BEARING CAPACITY, PLASTICITY, AND PERMEABILITY OF NATIVE SOIL; FROST-HEAVE POTENTIAL; VOLUME AND LOAD-RATING OF PROJECT TRAFFIC; INSTALLATION METHODS USED; AS WELL AS THE TYPE, GRADATION, AND THICKNESS OF THE SURROUNDING AND OVERLAY ROCK.

REQUIREMENTS FOR CONSTRUCTION EQUIPMENT

1. NDS RECOMMENDS 3 BACKFILL METHODS, STONESHOOTER LOCATED OFF THE CHAMBER BED, BACKFILL AS ROWS ARE BUILT USING AN EXCAVATOR ON THE FOUNDATION STONE OR SUBGRADE AND BACKFILL FROM OUTSIDE THE EXCAVATION USING A LONG BOOM HOE OR EXCAVATOR. CONVEYORS OR EXCAVATORS SHOULD BE LOCATED SUCH THAT THEIR LOADS DO NOT INFLUENCE THE CHAMBERS SHOULD BE USED TO PLACE BACKFILL STONE.
2. NO CONSTRUCTION EQUIPMENT ALLOWED ON TOP OF THE CHAMBER SYSTEM UNTIL MINIMUM STONE COVER REQUIREMENTS HAVE BEEN MET, 6-INCH FOR SC-18 AND SC-34 AND 12-INCH FOR SC-44, ONLY THEN SHOULD A SKID STEER OR SMALL DOZER (D4) BE ALLOWED ON TOP.
3. NO WHEEL LOADS SHOULD BE APPLIED OVER THE SYSTEM. ONCE THE MINIMUM STONE HAS BEEN PLACED OVER THE CROWN OF THE CHAMBERS, ONLY SMALL WALK BEHIND VIBRATORY COMPACTION EQUIPMENT CAN BE USED UNTIL A 12 INCHES OF COVER IS ACHIEVED. LIGHTWEIGHT TRACKED DOZERS WITH A MAXIMUM GROUND PRESSURE OF 1100 PSF ARE PERMITTED OVER THE STRUCTURE.
4. DOZERS MUST SPREAD STONE WORKING IN A DIRECTION PARALLEL WITH THE CHAMBER ROWS; NOT WORKING ACROSS THE CHAMBER ROWS. ANY CHAMBERS DAMAGED BY USING THE "DUMP AND PUSH" METHOD ARE NOT COVERED UNDER THE STORMCHAMBER STANDARD WARRANTY.
5. ONCE 18"(457mm) OF COMPACTED MATERIAL IS OVER THE CHAMBERS, HIGHWAY VEHICLES OF HS-20 AND HS-25 CAN BE OPERATED OVER THE STRUCTURES.
6. A FRONT END LOADER CAN BE OPERATED OVER THE STRUCTURES AS LONG AS THE MAXIMUM WHEEL LOAD DOES NOT EXCEED 16000 POUNDS. COMPACTING EQUIPMENT CAN BE OPERATED OVER THE STRUCTURES AS LONG AS THE DYNAMIC FORCE FROM THE DRUM DOES NOT EXCEED 20000 POUNDS AND THE GROSS VEHICLE WEIGHT DOES NOT EXCEED 12000 POUNDS.

BACKFILL, HANDLING AND INSTALLATION REQUIREMENTS

1. THIS DOCUMENT IS NOT A SUBSTITUTE FOR THE INSTALLATION GUIDE.
2. STORMCHAMBERS SHALL BE INSTALLED IN ACCORDANCE WITH THE NDS STORMCHAMBER INSTALLATION GUIDE.
3. STORMCHAMBERS SHALL NOT BE INSTALLED UNTIL THE MANUFACTURER'S REPRESENTATIVE HAS COMPLETED A PRE-CONSTRUCTION MEETING WITH THE INSTALLERS. **CONTACT NDS SPECIALIST 571-521-9538 OR LOCAL REPRESENTATIVE.**
4. IN HOT WEATHER CONDITIONS, IF POSSIBLE, STORE ALL CHAMBERS AND BACKFILL STONE IN A SHADED AREA UNTIL THEY ARE READY TO BE INSTALLED. OUR RECOMMENDATION IS THAT THE SYSTEM BE LAID OUT AND ALL PIPES CONNECTED THE DAY PRIOR TO BACKFILLING WITH STONE. **WHEN TEMPERATURES ARE ABOVE 85°F, BACKFILLING SHOULD BE RESTRICTED TO COOLER MORNING PERIODS ONLY.**
5. 3/4" TO 2" CLEAN, CRUSHED, WASHED, ANGULAR STONE AASHTO M43 DESIGNATION OF #3 OR #4 OR CRUSHED CONCRETE OF THE SAME SIZE. SEE ACCEPTABLE FILL MATERIAL TABLE ON PAGE 3.
6. FOOTING OF CHAMBERS SHOULD BE CONNECTED WITH A DRYWALL SCREW WHEN OVERLAPPING AND INSTALLING.
7. MINIMUM SPACING BETWEEN THE CHAMBER ROWS SC18 & SC34 = 6 INCHES, SC44 = 9 INCHES.
8. INLET, OUTLET, AND INSPECTION PIPES MUST BE INSERTED A MINIMUM OF 12 INCHES (300 mm) INTO CHAMBER.
9. STONE MUST BE PLACED ON THE TOP CENTER OF THE CHAMBER TO ANCHOR THE CHAMBERS IN PLACE AND PRESERVE ROW SPACING.
10. PLACE THE BACKFILL MATERIAL IN 6-8 INCH LOOSE LIFTS AND COMPACT. USE MECHANICAL HAND TAMPERS OR APPROVED COMPACTING EQUIPMENT TO COMPACT ALL BACKFILL AND EMBANKMENT IMMEDIATELY ADJACENT TO EACH SIDE OF THE INSTALLATION AND OVER TOP OF THE INSTALLATION TO THE MINIMUM DEPTH SPECIFIED.
11. PLACE BACKFILL SO THERE IS NO MORE THAN A TWO LIFT DIFFERENTIAL BETWEEN ANY OF THE CHAMBERS AT ANYTIME DURING THE BACKFILLING PROCESS (12 INCHES) .
12. PERIMETER STONE MUST BE BROUGHT UP EVENLY WITH CHAMBER ROWS. PERIMETER MUST BE FULLY BACKFILLED WITH STONE EXTENDED HORIZONTALLY TO THE EXCAVATION WALL.

BACKFILL METHODS

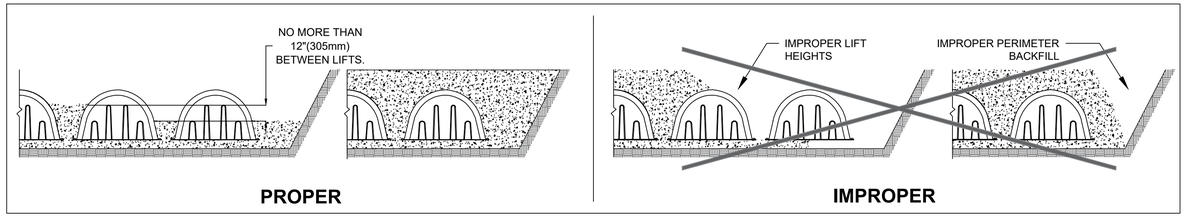

CHAMBER PART	WIDTH (IN)(MM)	HEIGHT (IN)(MM)	WEIGHT (LBS)	ACTUAL LENGTH (IN)(MM)	INSTALLED LENGTH (IN)(MM)	CHAMBER VOLUME (CF)(CM)	INSTALLED STORAGE VOLUME(CF)(CM)
START	76.25"(1937)	44"(1118)	120	89.5"(2273)	82.25"(2089)	102.4(2.89)	182.3(5.16)
MIDDLE	76.25"(1937)	44"(1118)	120	87.5"(2223)	75"(1905)	93.4(2.64)	152.2(4.30)
END	76.25"(1937)	44"(1118)	120	89.5"(2273)	82.25"(2089)	102.4(2.89)	182.3(5.16)
CLOSED	76.25"(1937)	44"(1118)	120	89.5"(2273)	89.5"(2273)	111.4(3.15)	238.1(6.74)

12"(305mm) ABOVE AND 9"(229mm) BELOW CHAMBER, 9"(229mm) CHAMBER SPACING, 12"(305mm) PERIMETER STONE AND 40% POROSITY

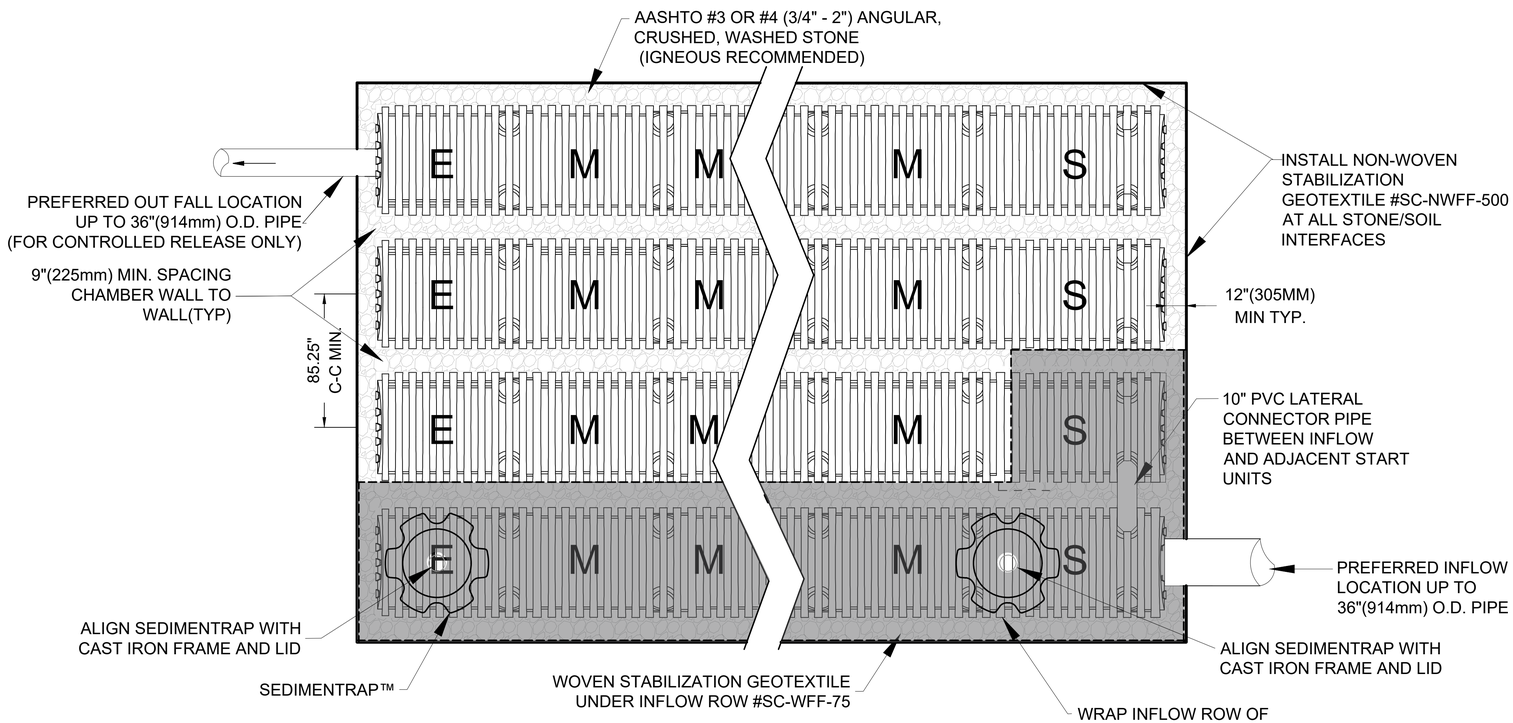

TYPICAL PLAN VIEW

SC-44105 DIMENSIONS

(DIMENSIONS MAY VARY SLIGHTLY)
WEIGHT: 120 LBS EA.

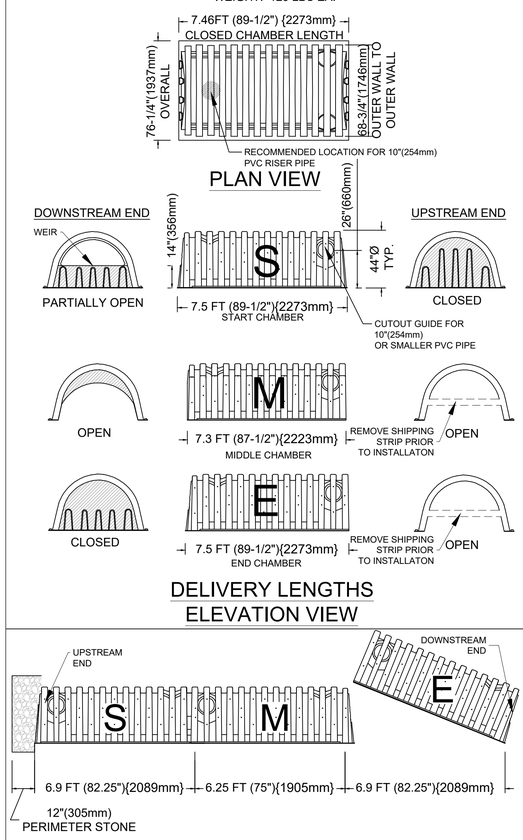

NOTES:

1. START CHAMBERS (CLOSED AT THE SIDE PORTAL END) ARE PLACED AT THE INFLOW END OF THE ROWS.
2. BEGIN PLACEMENTS WITH START CHAMBERS AND END ROWS WITH END CHAMBERS.
3. PLACE FIRST RIB OF THE NEXT CHAMBER IN THE ROW OVER THE LAST RIB OF THE PREVIOUS CHAMBER WITH SCREWS.

INSTALLED LENGTHS
ELEVATION VIEW

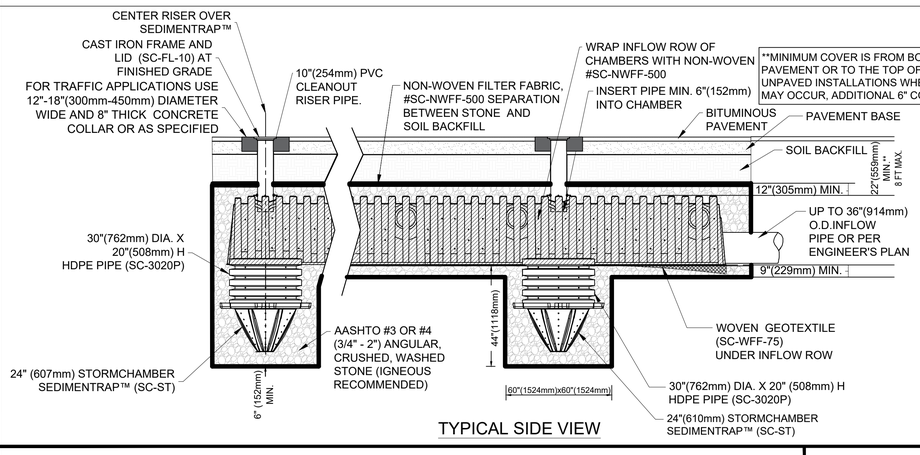

**MINIMUM COVER IS FROM BOTTOM OF FLEXIBLE PAVEMENT OR TO THE TOP OF RIGID PAVEMENT. FOR UNPAVED INSTALLATIONS WHERE RUTTING FROM VEHICLES MAY OCCUR, ADDITIONAL 6" COVER MAY BE REQUIRED.

TYPICAL SIDE VIEW

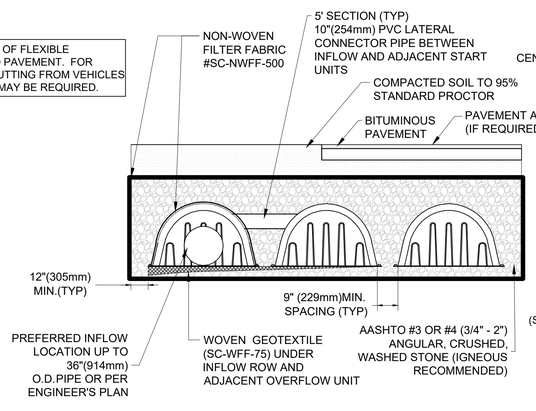

TYPICAL FRONT VIEW

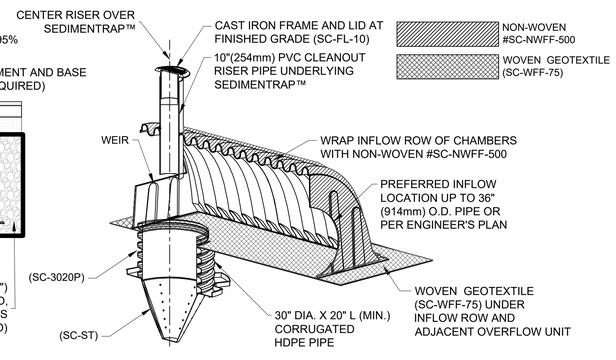

START CHAMBER CUTAWAY

MATERIAL LIST

DESCRIPTION	STOCK CODE	QTY	UNITS
CHAMBERS AND ACCESSORIES:			
START CHAMBER	SC-44105-S-O		EACH
MIDDLE CHAMBER	SC-44105-M-O		EACH
END CHAMBER	SC-44105-E-O		EACH
CLOSED CHAMBER	SC-44105-C-O		EACH
SEDIMENTRAP™	SC-ST		EACH
NON-WOVEN GEOTEXTILE	SC-NWFF-500		ROLLS
WOVEN STABILIZATION GEOTEXTILE	SC-WFF-75		ROLLS
30"Ø X 20"H HDPE PIPE FOR SEDIMENTRAP™	SC-3020P		EACH
10" CAST IRON FRAME AND LID	SC-FL-10		EACH
MATERIALS BY OTHERS:			
10"(254mm) DIAMETER RISER / LATERAL PIPE	OTHERS		EACH
IN-PLACE EXCAVATION (NO BULKING FACTOR)	OTHERS		CU YD
STONE BACKFILL	OTHERS		CU YD
1/4" X 1-1/2" NUT AND BOLT	OTHERS		EACH
3" SCREWS	OTHERS		EACH

PROJECT #

DRAWN BY: ARH

STORMCHAMBER®

NDS Design Worx™

SC-44105 STORMCHAMBER LAYOUT

MEETS OR EXCEEDS ASTM F2922 AND ASTM F2787.
MEETS AASHTO HS-20, HS-25 AND HL-93 LIVE LOADING PER AASHTO LRFD SECTION 12

DRAWING# 44105-DT
REV. E
DATE 11-10-2022

ENTER SYSTEM PARAMETERS

Measurement Type	Imperial	
Input Storage Volume	3,350	ft³
Select the Chamber Model	SC-44	
Select Design Constraint	Width	
Design Constraint Dimension	30	ft
Stone Above Chambers (min. 12 inches; max. 96 inches)	12	in
Stone Below Chambers (min. 9 inches)	9	in
Total Cover Over Chambers (min. 22 inches; max. 96 inches)	22	in
Stone Void (Industry Standard is 40%)	40	%
Desired Number of Layers	1	
Space Between each Layer (min. 12 Inches)	12	in
Number of Rows Desired	4	
Maximum Number of Rows Based on Constraint Dimension	*4*	
Space Between Each Row (min. 9 inches)	9	in
Number of SedimenTraps Desired	2	
Minimum Suggested Number of SedimenTraps (per inflow row)	*2*	
Do you need impervious liner to restrict infiltration?	no	
Number of Inflow Rows	1	
Perimeter stone border size 12 Inches		

Trench depths beyond the range suggested may be achievable.
For assistance please contact us at ***(888) 825-4716.***

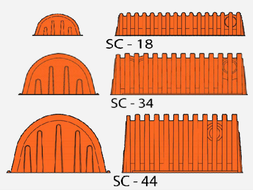

SYSTEM RESULTS

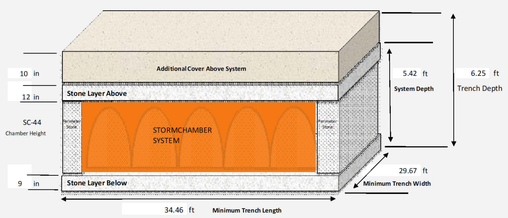

Total Chamber Storage Volume	1,953.04	Cubic Feet
Total Stone Storage Volume	1,433.69	Cubic Feet
Installed System Storage Volume	3,386.73	Cubic Feet
Minimum Internal Storage of a Chamber	94.02	Cubic Feet
Minimum Installed Storage with stone	152.61	Cubic Feet
Total Number of Chambers Required	20	Total #

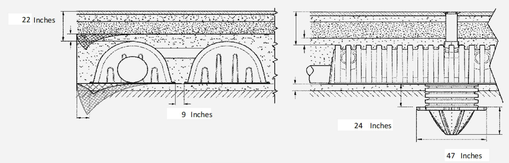

Minimum Trench Length	34.46	ft
Minimum Trench Width	29.67	ft
System Depth	5.42	ft
Trench Depth	6.25	ft
Minimum Bed Size Required	1,022	Square Feet

OTHER SYSTEM COMPONENTS

Minimum Amount of Stone Required	140	Cubic Yards	3/4" - 2" crushed, washed, ANGULAR stone.
Volume of Excavation (not including fill)	205	Cubic Yards	
Non-woven Filter Fabric Required	459	Square Yards	
Stabilization Fabric	1	Pieces	
Impervious Liner	-	Square Yards	

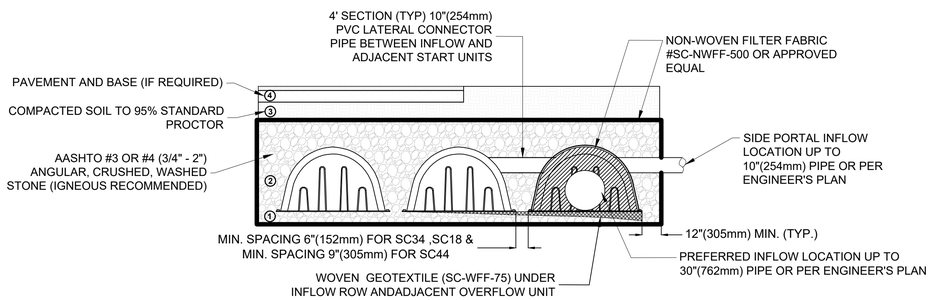

ACCEPTABLE FILL MATERIALS: NDS STORMCHAMBER SYSTEMS

	MATERIAL LOCATION	DESCRIPTION	AASHTO MATERIAL CLASSIFICATION	COMPACTION/DENSITY REQUIREMENT
4	FILL MATERIAL FOR LAYER '4'!STARTS FROM THE TOP OF THE '3' LAYER TO THE BOTTOM OF FLEXIBLE PAVEMENT OR UNPAVED FINISHED GRADE ABOVE. NOTE THAT PAVEMENT SUBBASE MAY BE PART OF THIS LAYER.	ANY SOIL/ROCK MATERIALS, NATIVE SOILS OR PER ENGINEER'S PLANS. CHECK PLANS FOR PAVEMENT SUBGRADE REQUIREMENTS.		PREPARE PER ENGINEER'S PLANS. PAVED INSTALLATIONS MAY HAVE STRINGENT MATERIAL AND PREPARATION REQUIREMENTS.
3	FILL MATERIAL FOR LAYER '3' STARTS FROM THE TOP OF THE EMBEDMENT STONE ('2' LAYER) TO 18" [457mm] ABOVE THE TOP OF THE CHAMBER. NOTE THAT PAVEMENT SUBBASE MAY BE A PART OF THIS LAYER.	GRANULAR WELL-GRADED SOIL/AGGREGATE MIXTURES, 35% FINES. MOST PAVEMENT SUBBASE MATERIALS CAN BE USED IN LIEU OF THIS LAYER.	AASHTO M145 A-1, A-2-4, A-3 OR AASHTO M43 #3; 357, 4, 467, 5, 56, 57, 6,67,68, 7, 78, 8, 89, 9, 10	BEGIN COMPACTION AFTER 12" [305mm] OF MATERIAL OVER THE CHAMBERS IS REACHED. COMPACT ADDITIONAL LAYERS IN 6" [152 mm] LIFTS TO A MIN. 95% STANDARD PROCTOR DENSITY, ROLLER GROSS VEHICLE WEIGHT NOT TO EXCEED 12,000 lbs. [53kN]. DYNAMIC FORCE NOT TO EXCEED 20,000lbs [89kN].
2	EMBEDMENT STONE SURROUNDING THE CHAMBERS FROM THE FOUNTAIN STONE ('1' LAYER) TO THE '3' LAYER ABOVE.	CLEAN, CRUSHED, ANGULAR STONE, NOMINAL SIZE DISTRIBUTION ¾ -2 INCH [19-51mm]	AASHTO M43 - #3, 4	90% T99.
1	FOUNDATION STONE BELOW CHAMBERS FROM THE SUBGRADE UP TO THE FOOT (BOTTOM) OF CHAMBER.	CLEAN, CRUSHED, ANGULAR STONE, NOMINAL SIZE DISTRIBUTION ¾ -2 INCH [19-51mm]	AASHTO M43 - #3, 4	PLATE COMPACTOR OR ROLL TO ACHIEVE A 95% STANDARD PROCTOR DENSITY. T99 AASHTO.

INSPECTION AND MAINTENANCE OF STORMCHAMBER SEDIMENTRAP ROW

STORMCHAMBER™ WITH SEDIMENTRAP™ ROW IS DESIGNED FOR EASE OF INSPECTION AND REDUCED LONG-TERM MAINTENANCE COST MONITORING T.S.S. BUILDUP IN A SEDIMENTRAP™ CAN BE DONE WITHOUT THE NEED FOR A THIRD PARTY AS THE TRAP SITS DIRECTLY BELOW THE OBSERVATION PORT. A CAMERA WITH LIGHT AND/OR LONG MEASURING STICK CAN SUCCESSFULLY INSPECT AND DETERMINE WHEN MAINTENANCE IS NEEDED. AS NEEDED, SEDIMENT REMOVAL WITH A VACUUM TRUCK REQUIRES LITTLE OR NO WATER JETTING AS WITH OTHER COMPETING SYSTEMS.

INSPECTION AND MAINTENANCE SCHEDULE

THE QUANTITY AND LOCATION OF INSPECTION PORTS VARY BY SITE. PLEASE REFER TO THE SITE PLAN AND LAYOUT TO CONFIRM INSPECTION PORT LOCATIONS. NEW INSTALLATIONS SHOULD BE INSPECTED QUARTERLY AND AFTER EACH LARGE STORM EVENT TO SEE HOW IT PERFORMS. IT IS RECOMMENDED THAT A LOGBOOK BE MAINTAINED SHOWING THE DEPTH OF WATER IN THE STORMCHAMBER AT EACH OBSERVATION IN ORDER TO DETERMINE THE RATE AT WHICH THE STORMCHAMBER SYSTEM DEWATERS AFTER RUNOFF PRODUCING STORM EVENTS. ONCE THE PERFORMANCE CHARACTERISTICS OF THE STORMCHAMBER HAVE BEEN VERIFIED, THE MONITORING SCHEDULE CAN BE REDUCED TO AN ANNUAL BASIS, UNLESS THE PERFORMANCE DATA SUGGESTS THAT A MORE FREQUENT SCHEDULE IS REQUIRED. **SEDIMENT SHOULD BE SERVICED WHEN DEPOSITS APPROACH WITHIN 6 INCHES FROM THE TOP OF THE SEDIMENTRAP OR CHAMBER BOTTOM.**

1: MAINTENANCE WITH SEDIMENTRAP - VACUUM TRUCK METHOD

REMOVE LID FROM INSPECTION PORTS. MEASURE THE DEPTH OF SEDIMENT BUILD-UP IN THE SEDIMENTRAPS.IF SEDIMENT BUILD-UP IN THE SEDIMENTRAP IS WITHIN 6 INCHES FROM THE TOP OF THE SEDIMENTRAP OR CHAMBER BOTTOM THEN PROCEED TO MAINTENANCE STEPS BELOW. IF SEDIMENT BUILD-UP IS LESS THAN6 INCHES, LOG THE RESULTS AND PLACE THE LIDS BACK ON.

- INSERT VACUUM TUBE THROUGH 10 INCH CLEAN OUT RISER.
- VACUUM TUBE WILL NEED TO REACH THE BOTTOM DEPTH OF SEDIMENTRAP (TYP. 7-10 FEET BELOW FINISHED GRADE).
- REMOVE SEDIMENT USING VACUUM TRUCK/EQUIPMENT UNTIL NO FURTHER SEDIMENT IS BEING REMOVED.
- INSPECT SEDIMENT BUILD-UP AGAIN TO ENSURE PROPER CLEANOUT.

2: MAINTENANCE WITHOUT SEDIMENTRAP - WATER JET METHOD

REMOVE LID FROM INSPECTION PORTS. MEASURE THE DEPTH OF SEDIMENT BUILD-UP ON THE UNDERLYING WOVEN FABRIC UNDER THE CHAMBERS. IF SEDIMENT BUILD-UP ON THE BOTTOM IS GREATER THAN 3 INCHES THEN PROCEED TO MAINTENANCE STEPS BELOW. IF SEDIMENT BUILD-UP IS LESS THAN 3 INCHES, LOG THE RESULTS AND PLACE THE LIDS BACK ON.

- REMOVE SEDIMENT FROM SEDIMENT ROW USING A HIGH PRESSURE WATER JET SYSTEM.
- PREFERRED EQUIPMENT REQUIRED SHOULD HAVE A FIXED FLOOR CLEANING NOZZLE (REAR FACING) WITH A SPREAD OF AROUND 45 INCHES.
- APPLY AS MANY PASSES IN THE ROW UNTIL THE BACKFLUSH WATER IS CLEAN.
- VACUUM AREAS UNDER INSPECTION PORTS AND OUT OF ANY MANHOLES.

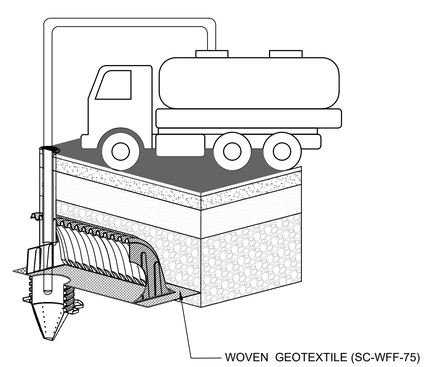

MAINTENANCE WITH SEDIMENTRAPS USING VACUUM TRUCK

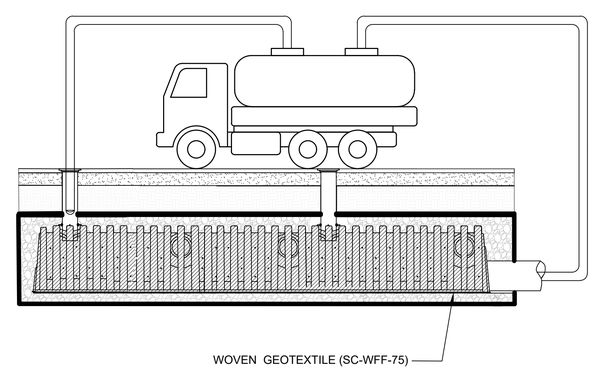

MAINTENANCE WITHOUT SEDIMENTRAPS USING WATER JET

PROJECT NAME :
PROJECT LOCATION :

DRAWN BY: ARH

STORMCHAMBER®

NDS Design Worx™

NDS STORMCHAMBER SYSTEM DETAILS

NDS SPECIALIST: **571-521-9538**